PRIORITIES FOR CASSAVA BY-PRODUCT RESEARCH

BPTP - SUKAMANDI, 1984 - 1989

BACKGROUND

Cassava has been one of the major food crops in Indonesia for centuries. At present, production is over 13 millions tons per year and yields average 9 tons/hectare. Cassava is an extremely versatile crop which grows under poor soil conditions with a minimum amount of attention and may be utilized both as a food for human consumption and as a raw material for industrial processing.

Table 1. outlines uses for each part of the cassava plant.

In Indonesia, cassava roots are commonly utilized fresh for human consumption or starch and dried roots for either human consumption or animal feed. Cassava leaves are picked while still young and cooked as a vegetable. Stalks are usually used as propagation material for the next planting and are rarely used for other purposes. The starch which is extracted from fresh roots is commonly used in the manufacture of baked goods and confections, as a thickening agent, bodying agent or dusting agent, or as a base for pharmaceuticals (drugs).

Although cassava is a well-known and popular Indonesian crop, it is drastically underutilized. The range of possible cassava products is wide, as seen in Table 1, and may therefore be greatly expanded. In addition, utilization of by-products of industrial processing is feasible and would serve to improve the economic returns in cassava processing.

PROSPECTS FOR UTILIZATION OF CASSAVA BY-PRODUCTS

A "by-product" usually refers to a product which is produced in addition to the major industrial product. If we assume that human foods, starch and animal feed are the major industrial product made from cassava in Indonesia, other products such as leaves, stalks and waste would be viewed as "by-products". For example, "onggok" is a by-product of starch extraction. a number of authors have devised agro-industrial systems which would fully utilize all parts of the cassava plant. Two of these are pictured in Figures 1 and 2. Figure 1 include the complete re-cycling or utilization of all the by-products of both protein extraction and starch extraction. Figure 2 outlines the method of leaf protein extraction in detail and also outlines the production of particle board from cassava stalks. Other potential by-products will be described briefly :

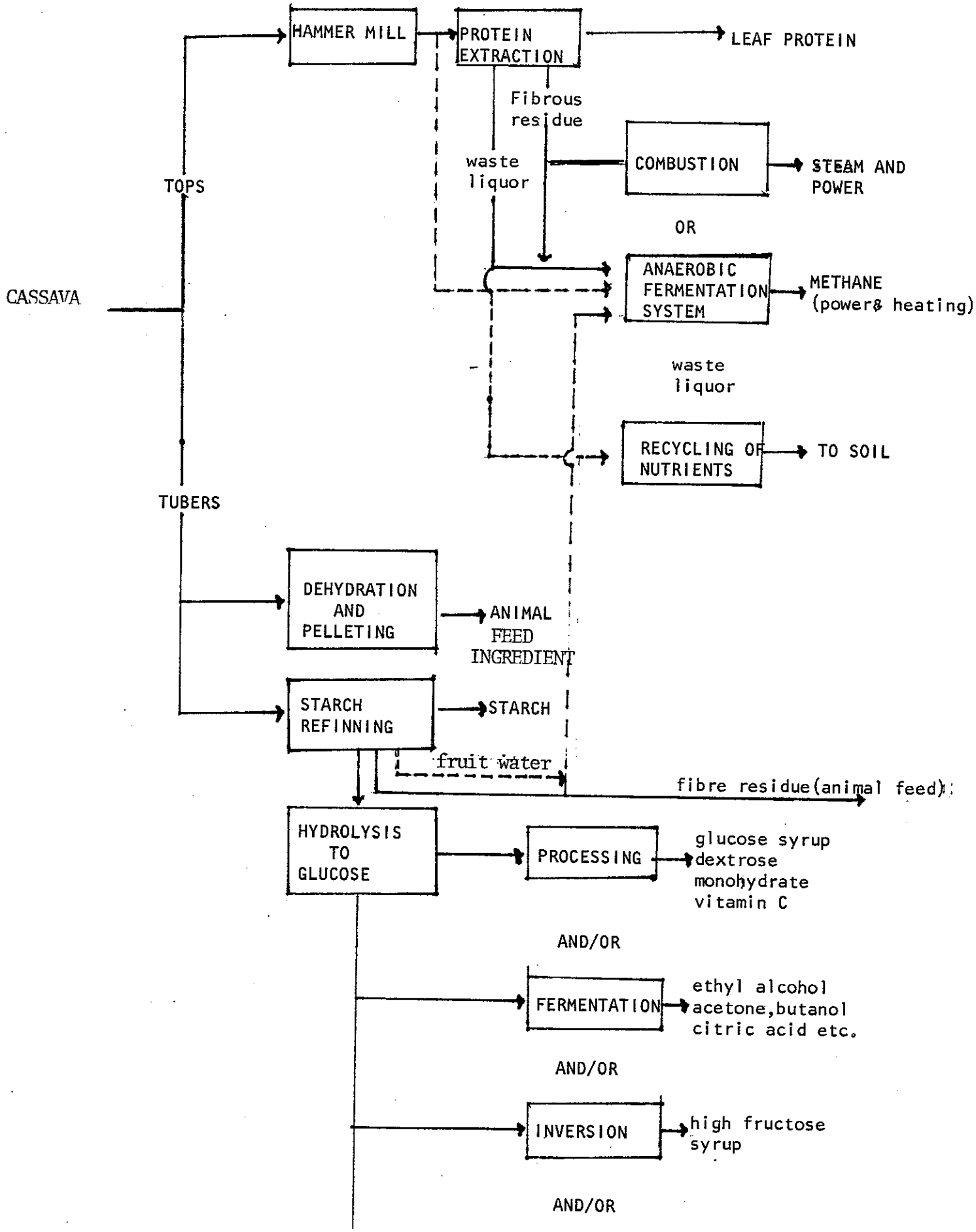
HAMMER MILL
PROTEIN EXTRACTION
LEAF PROTEIN
Fibrous residue
waste liquor
COMBUSTION
STEAM AND POWER
OR
TOPS
CASSAVA
ANAEROBIC FERMENTATION SYSTEM
METHANE (power& heating)
waste liquor
RECYCLING OF NUTRIENTS
TO SOIL
TUBERS
DEHYDRATION AND PELLETING
ANIMAL FEED INGREDIENT
STARCH REFINNING
STARCH
fruit water
fibre residue(animal feed)
HYDROLYSIS TO GLUCOSE
PROCESSING
glucose syrup
dextrose monohydrate
vitamin C
AND/OR
FERMENTATION
ethyl alcohol
acetone,butanol
citric acid etc.
AND/OR
INVERSION
high fructose syrup
AND/OR

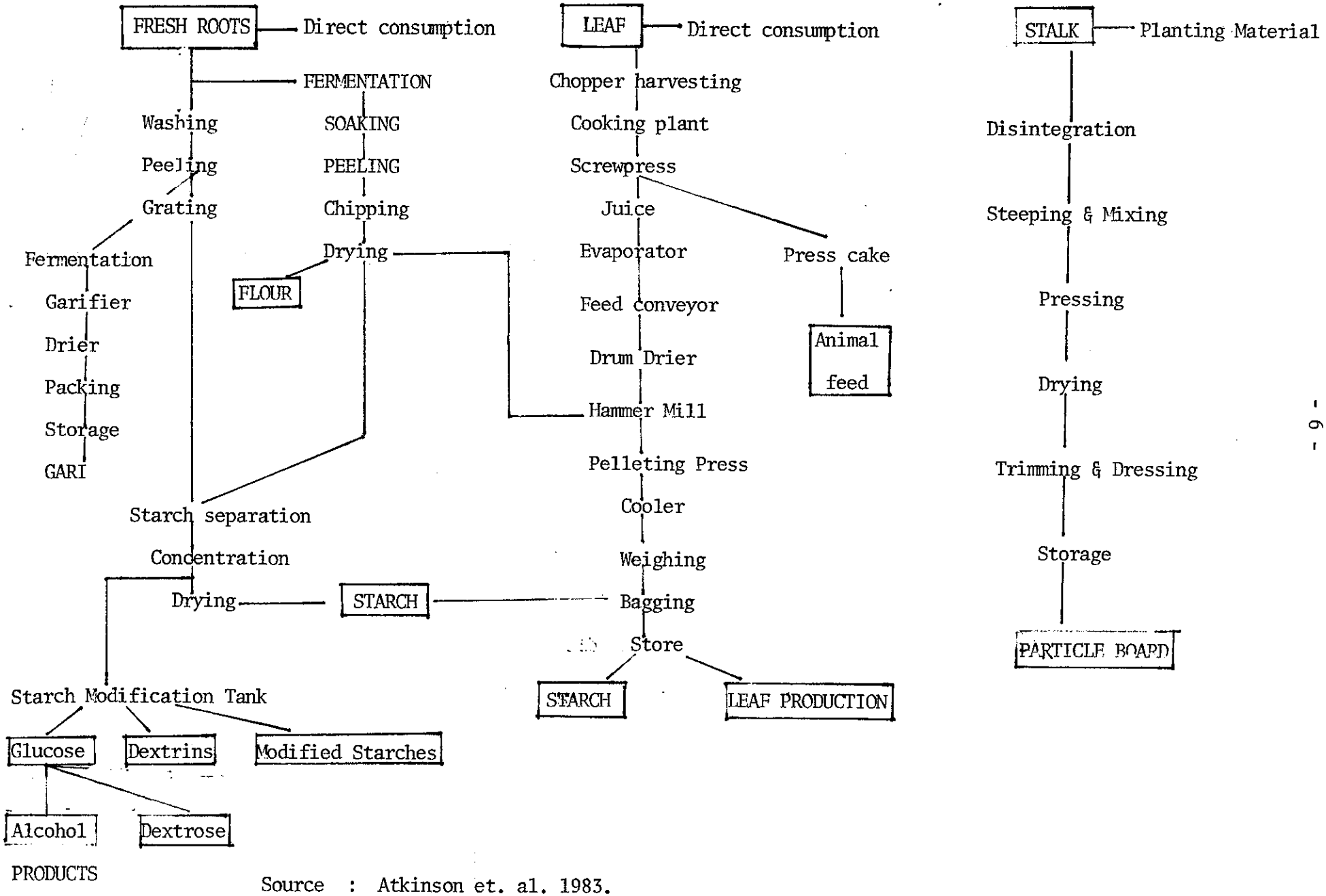

Source : Atkinson et. al. 1983.

Leaves

Cassava leaves are rich in protein, beta-carotene (vitamin A precursor) and vitamins B1, B2 and C. The leaf stem may contain up to 30% crude protein (dry weight basis) so that a yield of 15% crude protein may be possible from the foliage. A leaf protein concentrate is easily obtained by the process outlined in Figure 2. . The use of heat to coagulate proteins in juice also destroys any cyanogenic toxicity. So far, not much work has been done on leaf protein extraction, nutrition or palatability, however tremendous potential exists. Such a concentrate might be used in animal feed concentrates. Differential fractionation into cytoplasmic and choroplastic concentrates is possible with steam and this is one way of removing the green color and "grassy" taste and making the concentrate acceptable to humans.

The fibrous residue from leaf protein extraction will also contain unextracted protein as well as nonprotein nitrogen, making it acceptable as a low grade animal feed. In addition, it could be used for particle board manufacture, burned to provide steam for heat and electricity generation, or anaerobically fermented (together with the coagulum filtrate) to methane (McCann, 1977).

Leaf production, nutritional characteristics and palatability have not been fully investigated in Indonesia. In light of the fact that leaves are commonly consumed as a vegetable, further investigation would be merited.

Stalks

Stalks are largely underutilized in Indonesia. Figure 2 shows that disintegration of cassava stalks will adequately break apart the fibrous stalks so that they may be mixed with leaf press cake and used for animal feed. In addition, stalks may be easily processed into particle board.

Starch

Small, medium and large scale starch plants exist in the major cassava-producing areas in Indonesia. Most of these factories produce only one major product, i.e. cassava starch. The capacity for production of by-products during the starch extraction process is tremendous. McCann (1979) has outlined a scheme for maximum utilization of cassava residue in starch manufacture, as shown in Figure 3. For every ton of fresh cassava roots, 40 kg of dried solid is available as peels and 50 kg as pulp waste. If these two waste streams are used as a raw material feed to an anaerobic digester it is possible to produce 1100 MJ of methane gas, which is sufficient to provide two-thirds of the energy requirements for the whole starch manufacturing process. The remaining one-third could feasibly be provided from pulped cassava tops or from the fibrous residue left after leaf protein extraction (McCann, 1977). The residue from the digester still contains nutrients and can be utilized in an aquaculture system to provide high protein food in the form of algae, fish and ducks.

As an alternative to such a scheme, the fruit water and fiber residue produced as by-products of starch manufacture may be utilized as outlined in Figure 1. Some starch factories currently produce "onggok" which is sold as animal feed, however many do not utilize the fibrous residue left after starch extraction. This residue may contain as much as 50-60% starch and is therefore still an economically potential product. It might be possible to partially ferment this residue using yearst or fungi in order to increase protein content.

Chips and Pellets

Table 1 lists a variety of products which may be made from chips and crushed chips or flour. Currently, dried cassava is only utilized as a human food in poor areas where rice is scarce or as an animal feed in the form of chips or pellets. Dried cassava, or "gaplek", may be ground and utilized in fortified flours, protein and amino acid enriched flours. Small, broken root pieces and "dust" resulting from gaplek chip or pellet production may also be utilized as by-products for flour production.

OBJECTIVES

The objectives of a research program of cassava by-product utilization would be the following :

1. To develop appropriate technology for the utilization of cassava leaves, stalks, starch and dried chip by-products which may be implemented at the farmer or village level.

2. To fully investigate the physico-chemical and nutritional properties of cassava by-products and determine acceptability for human and animal feed utilization.

3. To increase farmer income by utilizing economically viable by-products which were previously discarded.

STRATEGY AND RESEARCH PROGRAM

Factors such as farmer's awareness of appropriate technology, willingness to learn and availability of required equipment and raw materials will affect the degree to which cassava by-product utilization may be introduced at the village level. For these reasons, research activities and strategies will depend on the existing situation. Improvement of existing cassava by-product utilization will be first priority, followed by introduction and development of new technology. Research activities may be divided into the following five categories :

1. Assessment of Current Cassava By-Product Utilization

Surveys must be conducted in the major cassava producing areas of Indonesia to determine the current status of by-product utilization. Focal points would include the following: use of cassava leaves; stalks; methods of starch extraction (if any) and use of fruit water, peels and fibrous residue; methods of dried root production and use of peels, brokens and dust. Once current practices have been assessed, the literature should be reviewed to find alternative or new methods of by-product utilization.

2. Development of Improved Methods of By-Product Utilization

Once existing methods have been assessed, they should be studied in the laboratory and on small-scale production to determine whether they might be improved. For example, if the fibrous pulp obtained in starch extraction is currently thrown away, it would be possible to examine the feasibility of a second starch extraction and/or utilization of the whole residue for animal feed. Research directions will depend on current practices.

3. Development of New Methods of By-Product Utilization

Many "new" methods of cassava by-product utilization were discussed in the earlier section of this paper. Some which might be practical at the farmer or village level include the following : extraction of leaf protein for animal feed; anaerobic digestion of peels, fibrous residue and waste liquor to produce methane; hydrolysis of starch to glucose and subsequent processing to syrup, dextrose or other products; hydrolysis of starch to glucose and subsequent fermentation to ethyl alcohol, acetone, butanol or citric acid and processing of cassava stalks for animal feed or particle board.

Prior to introduction to the farmer, these new technologies must be studied in the laboratory and developed into simple, practical processes which will benefit the farmer.

4. Equipment Design and Processing Technology

In support of the improved or new technologies for cassava by-product utilization, appropriate equipment and processing technologies must be designed and tested. Objectives to keep in mind include simple design, low cost, sturdiness and adaptability.

5. Physico-Chemical Evaluation and Nutritional Quality

In order to control quality during processing and insure the highest nutritional content possible, physical, chemical and nutritional characteristics of resulting by-products must be carefully monitored. Desirable components, i.e. high protein content vs. gelatinization temperature vs. fiber content, etc., will depend on whether the product is to be utilized for human consumption, animal feed or industrial product processing.

CONTRAINTS

Technical Constraints

Various technical constrains, which presently inhibit research cassava by-product utilization, currently exist. These include: the lack of appropriate technologies for the farmer or village level, lack of appropriate equipment and lack of knowledge of cassava by-product uses at the village level.

Non-Technical Constraints

Non-technical constraints which also inhibit the development of cassava by-product utilization include : lack of skilled

scientists in the fields of cassava processing and by-product utilization, lack of funds for a thorough research program, acceptability of final by-products at the farmer level, knowledge of farmers and willingness to attempt new and improved technologies.

TIME SCHEDULE

A possible time schedule for research activities is presented in Appendix 1. First priority should be given to assessment of current cassava by-product utilization, then to the improvement and development of new technologies.

DMB:is

BIBLIOGRAPHY

1. Alkinson, D.R., D.J. Wholey, I.R.W. Jarman and J. Turnbull. 1983. A Factory Concept for Integrated Cassava Processing Operations. UN Industrial Development Organization UNIDO/I0.534. pp 1 - 131.

2. Ciptadi, W. 1980. Umbi Ketela Pohon Sebagai Bahan Industri. Institut Pertanian Bogor. pp 1 - 39.

3. Cock, J., R. MacIntyre and M. Graham. 1977. Proceedings of the Fourth Symposium of the International Society for Tropical Root Crops. pp 1 - 277.

Appendix 1. Time Schedule for cassava by-product utilization research, activities, 1984 - 1989.

Research Activity	1984	1985	1986	1987	1988	1989
1. Assessment of current utilization						
a) surveys						
b) literature review						
2. Development of improved methods						
a) leaves						
b) stalks						
c) starch						
d) chips/pellets						
3. Development of new methods						
a) leaves						
b) stalks						
c) starch						
d) chips/pellets						
4. Equipment design						
5. Physico-chemical and nutritional evaluation.						